CHANCCTV
Sharper Optical Lens

PRODUCT: CH668A

EFL		50mm		
F/No.		F2.8-16		
For Sensor		1.1"	1"	2/3"
F.O.V	H	16.1°	42.1°	29.7°
	V	12.9°	32.2°	22.5°
	D	19.8°	51.2°	36.6°
Object Dimension at M.O.D	H	70.8mm	64.4mm	44.28mm
	V	56.9mm	51.76mm	33.2mm
	D	89.1mm	81mm	55.36mm
TV Distortion		<0.1%	<0.1%	<0.1%
M.O.D		0.3m~∞		
FFL		17.53mm		
BFL		11.85mm		
Filter Size		M40.5*P0.5		
Front/ Rear Effective Dia		Ø30/Ø16		
Mount Type		C-Mount		
Operating Temperature		-20°C~+85°C		
Storage Temperature		-20°C~+85°C		

Working Distance(mm)	Optical Magnificationi	1" F.O.V (mm)	
1000	-0.0516X	248.06	186.05
900	-0.0575X	222.61	166.96
800	-0.065X	196.92	147.69
700	-0.0747X	171.35	128.51
600	-0.0878X	145.79	109.34
500	-0.106X	102.75	90.57
400	-0.135X	94.85	71.11
300	-0.185X	69.19	51.89

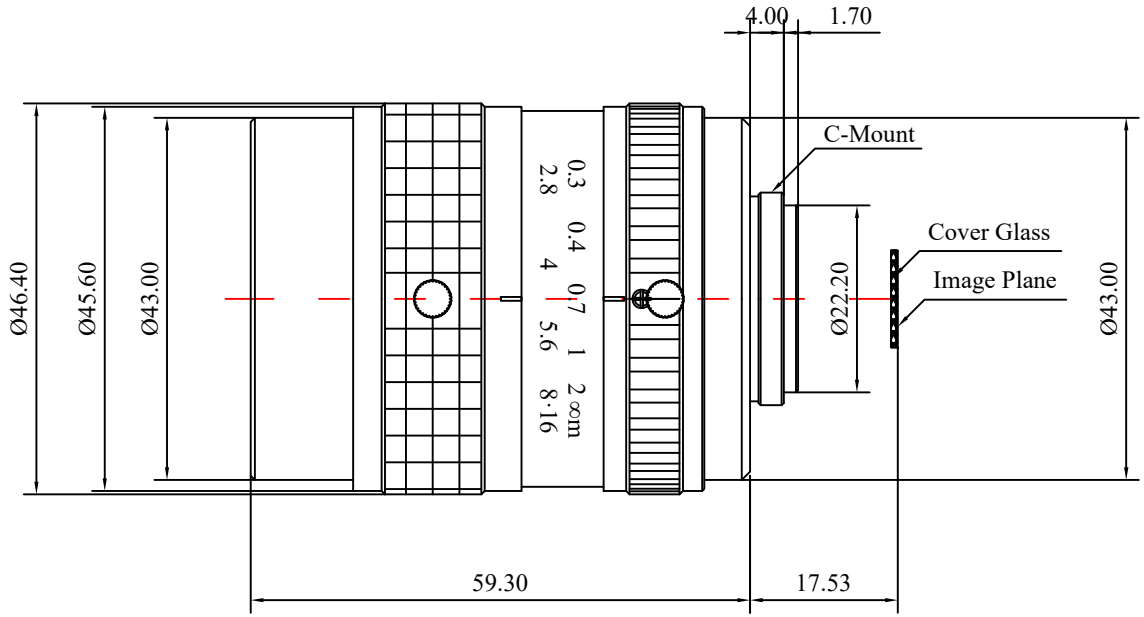

Scale	Remark	Tolerances	Date	Revised	
4:1	X	±0.2	2024-04-07	CH668A Rev1.0	
	X.0	±0.15			
Units	X.00	±0.10	Design	Linda	2024-01-02
	X.000	±0.001	Checked	Anna	2024-02-01
mm	Angle	±0.5°	Approval	Sanmu	2024-03-18

福州创安光电科技有限公司
FUZHOU CHUANGAN OPTICS CO., LTD

3D Angle Projection