CHANCCTV
Sharper Optical Lens

PRODUCT: CH3913A

1	Type		M12 Lens		
2	Resolution		5MP		
3	Image Format		2/3"		
4	Image Circle		ϕ10.6mm(MAX)		
5	EFL		35mm		
6	TTL		34.67mm		
7	F/NO.		2.8		
8	FFL（M)		4.8mm		
9	BFL（O)		7.6mm		
10	For Sensor		2/3"	1/2"	1/3"
11	F.O.V	Horizontal	14.36°	10.45°	7.85°
12		Vertical	10.8°	7.85°	5.89°
13		Diagonal	17.94°	13.04°	9.80°
14	TV Distortion		<-2%		
15	Relative Ill.		>60%		
16	Chief Ray Angle		<10.2°		
17	M.O.D		0.3m~∞		
18	Mount Type		M12*P0.5		
19	Dimension Figure		ϕ22.0*L29.82mm		
20	Lens Structure		5G All Glass		
21	IR-Filter		Non IR		
22	Weight		16.6g		
23	Iris Operation		Fixed		
24	Zoom Operation		Fixed		
25	Focus Operation		Manual		
26	Operating Temperature		-20° ~+85°		
27	Storage Temperature		-20° ~+85°		

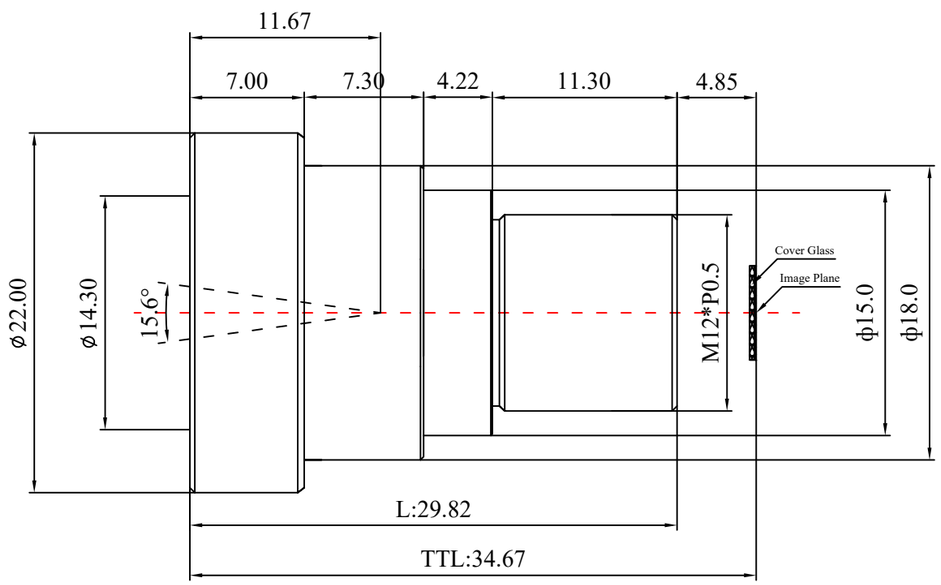

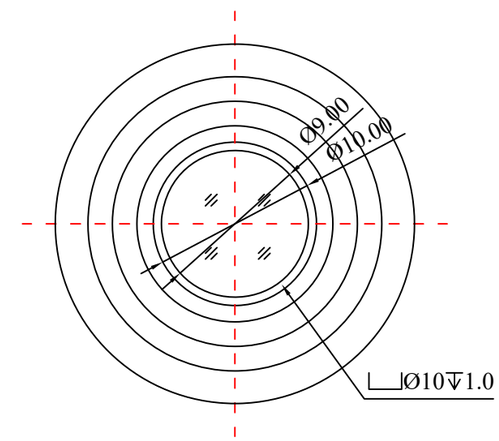

Scale	Remark	Tolerances	Date	Revised	Revised
4：1	X	± 0.2	2017-04-06	CH3913A Rev1.0	
	X.0	± 0.15			
Units	X.00	± 0.10	Design	Linda	2017-03-11
	X.000	± 0.001	Checked	Anna	2017-03-28
mm	Angle	± 0.5°	Approval	Sanmu	2017-04-03

福州创安光电科技有限公司
FUZHOU CHUANGAN OPTICS CO., LTD

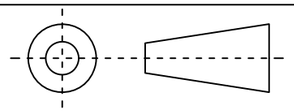

3D Angle Projection