PRODUCT: CH3770AB

1	Type		Low Distortion Lens			
2	Resolution		16MP			
3	Image Format		1/1.8"			
4	Image Circle		ϕ9.0mm(MAX)			
5	EFL		16mm			
6	TTL		21.66mm			
7	F/NO.		F2.8			
8	FFL（M)		5.44mm			
9	BFL（O)		8.93mm			
10	For Sensor	IMX334	OS08A10	IMX577	IMX458	
11	F.O.V	H	26.8°	26.8°	22°	16.6°
12		V	15.2°	15.2°	16.5°	12.2°
13		D	30.6°	30.6°	27°	20.4°
14	TV Distortion		<-0.35%			
15	Relative Ill.		>93%			
16	Chief Ray Angle		<10°			
17	M.O.D		0.1m~∞			
18	Mount Type		M12*P0.5			
19	Dimension Figure		ϕ14.0*L16.32mm			
20	Lens Structure		6G			
21	IR-Filter		T=50%&IR650±10nm			
22	Waterproof		---			
23	Weight		---			
24	Iris Operation		Fixed			
25	Zoom Operation		Fixed			
26	Focus Operation		Manual			
27	Operating Temperature		-20° ~+85°			
28	Storage Temperature		-20° ~+85°			

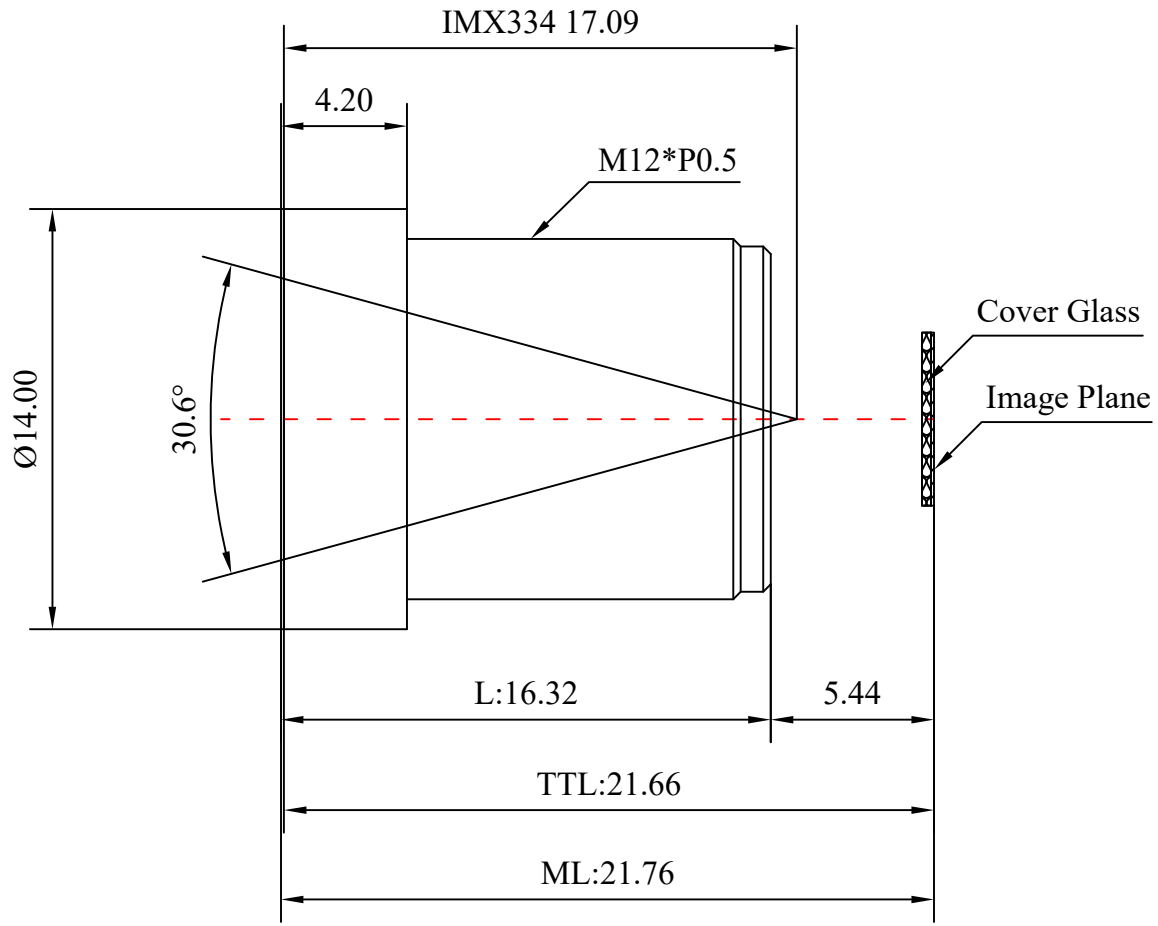

Scale	Remark	Tolerances	Date	Revised	
4:1	X	±0.2	2022-01-14	CH3770AB Rev1.0	
	X.0	±0.15			
Units	X.00	±0.10	Design	Linda	2022-01-08
	X.000	±0.001	Checked	Anna	2022-01-12
mm	Angle	±0.5°	Approval	Sanmu	2022-01-13

福州创安光电科技有限公司
FUZHOU CHUANGAN OPTICS CO., LTD

3D Angle Projection