CHANCCTV
Sharper Optical Lens

PRODUCT: CH3682B

1	Type		ITS Lens
2	Resolution		12MP
3	Image Format		1"
4	Image Circle		ϕ16.0mm(MAX)
5	EFL		12mm
6	Flange BFL		17.53mm
7	F/NO.		F1.4
8	FFL（M)		10.90mm
9	BFL（O)		14.90mm
10	For Sensor		1"
11	F.O.V	Horizontal	61.7°
12		Vertical	34.4°
13		Diagonal	68.2°
14	OPT Distortion		<-3.65%
15	Relative Ill.		---
16	Chief Ray Angle		<16°
17	M.O.D		0.5m~∞
18	Mount Type		C-Mount
19	Dimension Figure		ϕ42.5*L62.50mm
20	IR Correction		Yes
21	IR-Filter		---
22	Waterproof		No
23	Weight		---
24	Iris Operation		Manual
25	Zoom Operation		Fixed
26	Focus Operation		Manual
27	Operating Temperature		-30° ~+85°
28	Storage Temperature		-30° ~+85°

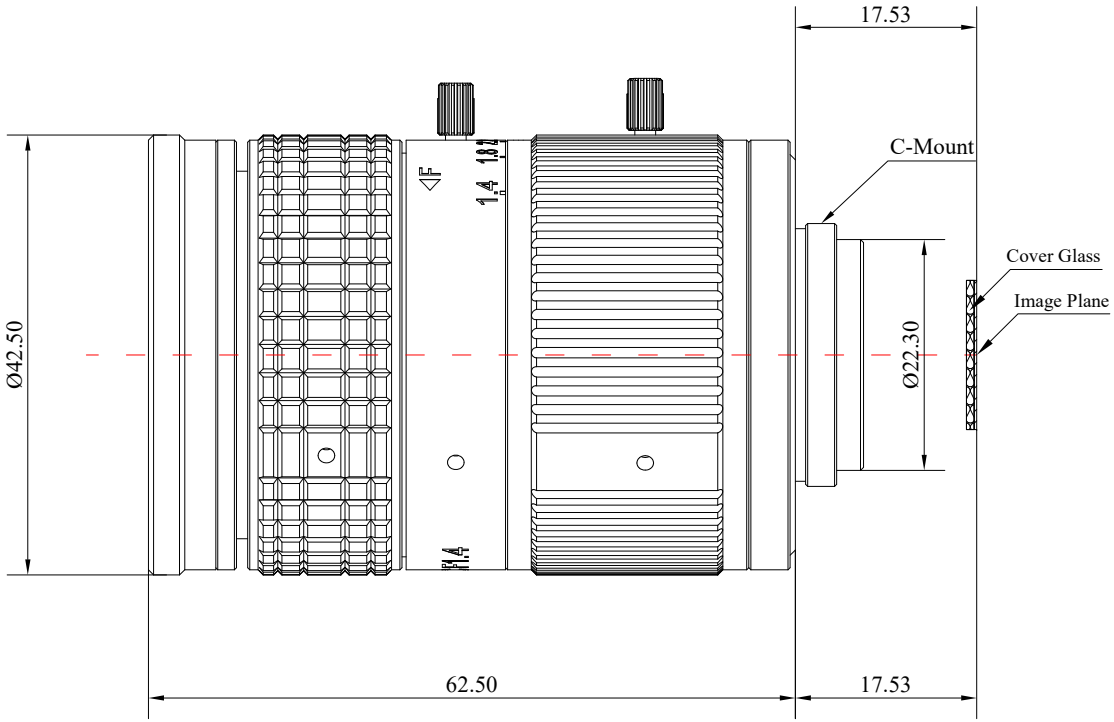

Scale	Remark	Tolerances	Date	Revised	
4:1	X	±0.2	2020-05-14	CH3682B Rev1.0	
	X.0	±0.15			
Units	X.00	±0.10	Design	Linda	2018-03-13
	X.000	±0.001	Checked	Anna	2018-04-09
mm	Angle	±0.5°	Approval	Sanmu	2018-04-19

福州创安光电科技有限公司
FUZHOU CHUANGAN OPTICS CO., LTD

3D Angle Projection