PRODUCT: CH1950C

1	Type		Scan Lens
2	Resolution		MP
3	Image Format		1/4"
4	Image Circle		ϕ4.8mm(MAX)
5	EFL		3.55mm
6	TTL		10.58mm
7	F/NO.		5.6
8	FFL（M)		1.39mm
9	BFL（O)		2.16mm
10	For Sensor		1/4"
11	F.O.V	Horizontal	54°
12		Vertical	43°
13		Diagonal	70°
14	TV Distortion		<1%
15	Relative Ill.		>50%
16	Chief Ray Angle		<10°
17	M.O.D		0.01m~∞
18	Mount Type		M12*P0.5
19	Dimension Figure		ϕ14.0*L9.63mm
20	Lens Structure		4E+IR
21	IR-Filter		T=50%&IR650nm±10nm
22	Weight		0.9g
23	Iris Operation		Fixed
24	Zoom Operation		Fixed
25	Focus Operation		Manual
26	Operating Temperature		-20° ~+85°
27	Storage Temperature		-20° ~+85°

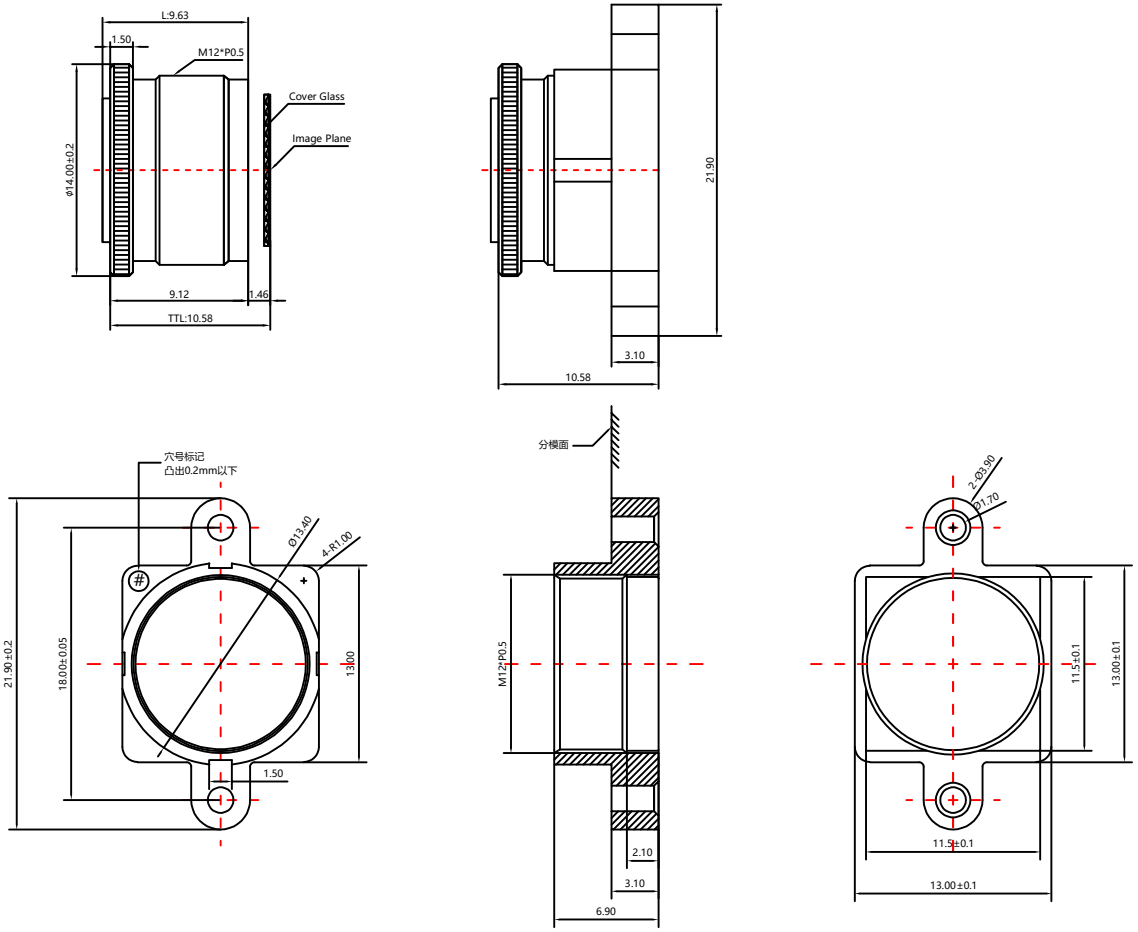

Scale	Remark	Tolerances	Date	Revised	
4：1	X	± 0.2	2019-10-11	CH1950C Rev1.0	
	X.0	± 0.15			
Units	X.00	± 0.10	Design	Linda	2016-08-07
	X.000	± 0.001	Checked	Anna	2016-10-08
mm	Angle	± 0.5°	Approval	Sanmu	2016-10-13

福州创安光电科技有限公司
FUZHOU CHUANGAN OPTICS CO.，LTD

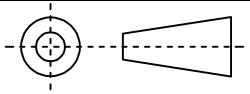

3D Angle Projection