PRODUCT: CH160FB

1	Type		Low Distortion Lens	
2	Resolution		8.8MP	
3	Image Format		6.4*4.8*8.0mm	
4	Image Circle		ϕ8.0mm(MAX)	
5	EFL		3.5mm	
6	TTL		23.71mm	
7	F/NO.		2.8	
8	FFL（M)		5.12mm	
9	BFL（O)		5.65mm	
10	For Sensor		1/2"	1/3"
11	F.O.V	Horizontal	86°	70°
12		Vertical	70°	50°
13		Diagonal	100°	82°
14	TV Distortion		<-1%	<-0.5%
15	Relative Ill.		>78%	
16	Chief Ray Angle		<24°	
17	M.O.D		0.1m~∞	
18	Mount Type		M12*P0.5	
19	Dimension Figure		ϕ20.0*L18.59mm	
20	Lens Structure		6G+1MO All Glass	
21	IR-Filter		T=50%&IR650±10nm	
22	Weight		7.3g	
23	Iris Operation		Fixed	
24	Zoom Operation		Fixed	
25	Focus Operation		Manual	
26	Operating Temperature		-20° ~+85°	
27	Storage Temperature		-20° ~+85°	

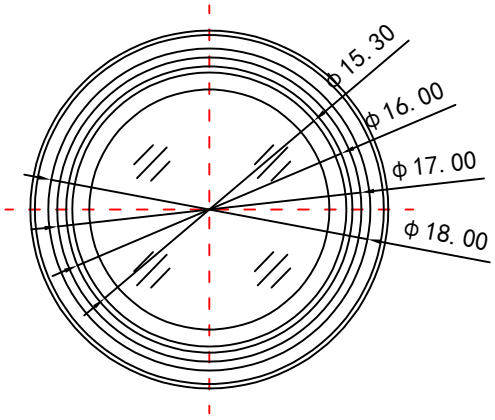

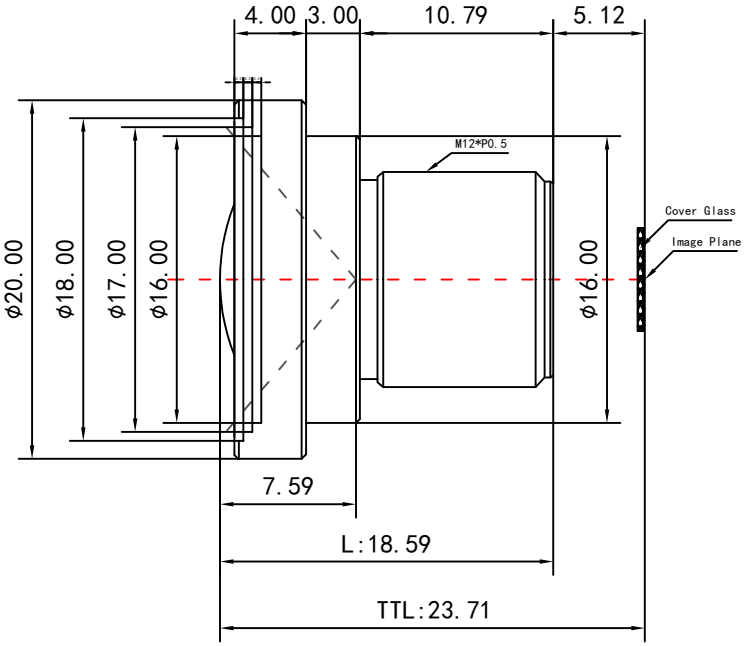

Scale	Remark	Tolerances	Date	Revised	
4：1	X	± 0.1	2019-07-29	CH160FB Rev1.0	
	X.0	± 0.05			
Units	X.00	± 0.03	Design	Linda	2017-02-10
	X.000	± 0.001	Checked	Anna	2017-10-12
mm	Angle	± 0.5°	Approval	Sanmu	2017-12-10

福州创安光电科技有限公司
FUZHOU CHUANGAN OPTICS CO., LTD

3D Angle Projection