PRODUCT: CH1310A

1	Type		Wide Angle Lens
2	Resolution		MP
3	Image Format		1/4"
4	Image Circle		ϕ4.6mm(MAX)
5	EFL		2.0mm
6	TTL		13.06mm
7	F/NO.		2.4
8	FFL（M)		2.49mm
9	BFL（O)		5.26mm
10	For Sensor		1/4"
11	F.O.V	Horizontal	115°
12		Vertical	87°
13		Diagonal	170°
14	TV Distortion		<-24%
15	Relative Ill.		>63%
16	Chief Ray Angle		<11°
17	M.O.D		0.1m~∞
18	Mount Type		M12*P0.5
19	Dimension Figure		ϕ14.00*L10.57mm
20	Lens Structure		5G
21	IR-Filter		T=50% &650±10nm
22	Waterproof		No
23	Weight		3.5g
24	Iris Operation		Fixed
25	Zoom Operation		Fixed
26	Focus Operation		Manual
27	Operating Temperature		-20° ~+85°
28	Storage Temperature		-20° ~+85°

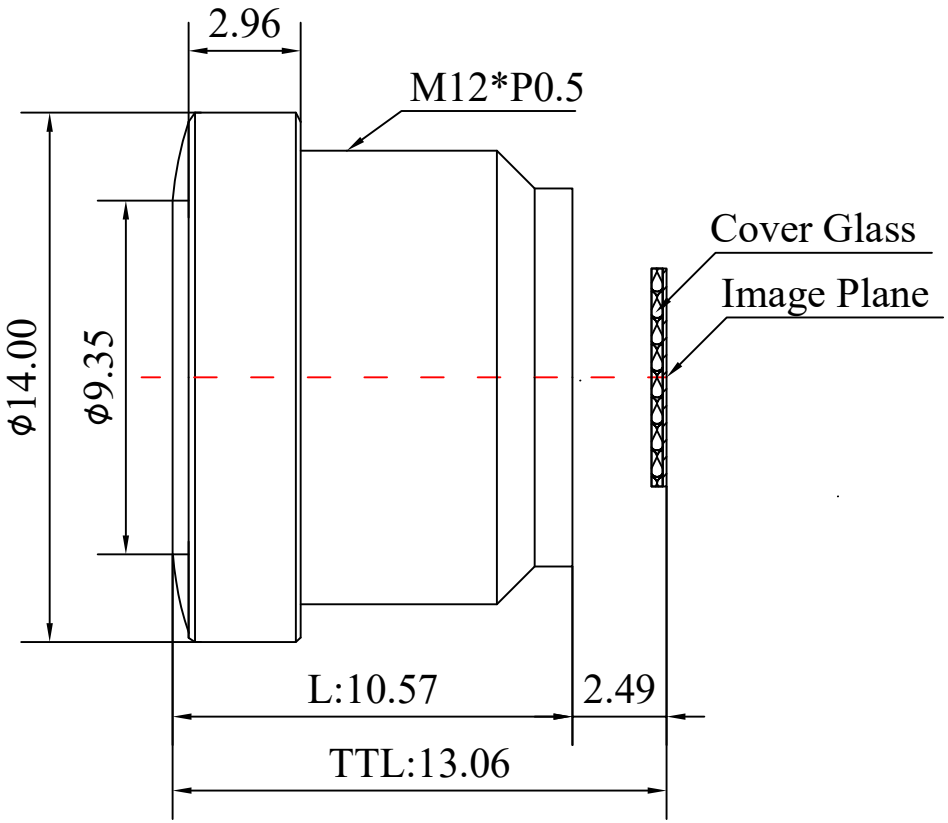

Scale	Remark	Tolerances	Date	Revised	
5 :1	X	±0.2	2019-05-12	CH1310A Rev1.0	
	X.0	±0.15			
Untis	X.00	±0.10	Design	Linda	2016-06-19
	X.000	±0.001	Checked	Anna	2016-08-21
mm	Angle	±0.5°	Approval	Sanmu	2016-08-22

福州创安光电科技有限公司
FUZHOU CHUANGAN OPTICS CO., LTD

3D Angle Projection