CHANCCTV
Sharper Optical Lens

PRODUCT: CH1117AE

1	Type		Low Distortion Lens	
2	Resolution		16MP	
3	Image Format		1/2.3″&1/2.5″	
4	Image Circle		ϕ8.0mm(MAX)	
5	EFL		2.7mm	
6	TTL		25.29mm	
7	F/NO.		2.8	
8	FFL（M)		3.91mm	
9	BFL（O)		5.93mm	
10	For Sensor		IMX377	IMX577
11	F.O.V	Horizontal	77°	85.4°
12		Vertical	61.1°	69°
13		Diagonal	87.7°	99.54°
14	TV Distortion		<-1%	<-1.5%
15	Relative Ill.		>78%	>79%
16	Chief Ray Angle		<10°	<10.2°
17	M.O.D		0.1m~∞	
18	Mount Type		M12*P0.5	
19	Dimension Figure		ϕ17.4*L21.38mm	
20	Lens Structure		4G+2GM	
21	IR-Filter		IR550+660+850nm	
22	Weight		6.9g	
23	Iris Operation		Fixed	
24	Zoom Operation		Fixed	
25	Focus Operation		Manual	
26	Operating Temperature		-20° ~+85°	
27	Storage Temperature		-20° ~+85°	

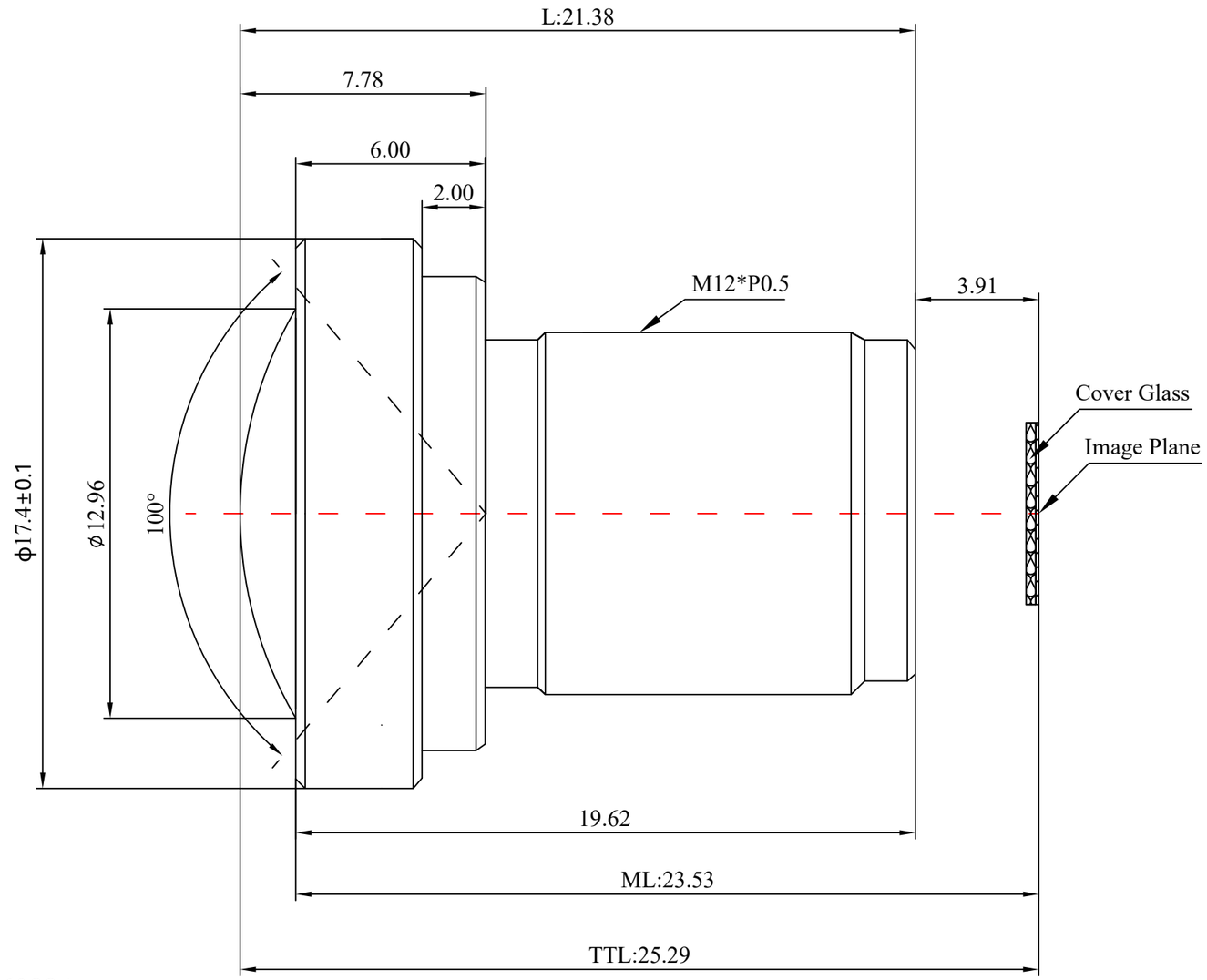

IR No.:CH6088A

Scale	Remark	Tolerances	Date	Revised	
4：1	X	± 0.2	2019-05-05	CH1117AE Rev1.0	
	X.0	± 0.15			
Units	X.00	± 0.10	Design	Linda	2017-06-11
	X.000	± 0.001	Checked	Anna	2017-08-12
mm	Angle	± 0.5°	Approval	Sanmu	2017-08-15

福州创安光电科技有限公司
FUZHOU CHUANGAN OPTICS CO., LTD

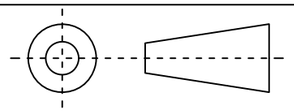

3D Angle Projection