CHANCCTV
Sharper Optical Lens

PRODUCT: CH1100AD

1	Type		Low Distortion Lens	
2	Resolution		8.8MP	
3	Image Format		1/2.3"	
4	Image Circle		ϕ8.1mm(MAX)	
5	EFL		4.35mm	
6	TTL		22.05mm	
7	F/NO.		3.0	
8	FFL（M)		2.73mm	
9	BFL（O)		3.65mm	
10	For Sensor		1/2.3"	AR0230
11	F.O.V	Horizontal	73°	66°
12		Vertical	56°	41°
13		Diagonal	86°	75°
14	TV Distortion		<-1.2%	<-1.0%
15	Relative Ill.		>75%	>80%
16	Chief Ray Angle		<15°	<13°
17	M.O.D		0.1m~∞	
18	Mount Type		M12*P0.5	
19	Dimension Figure		ϕ14.0*L19.32mm	
20	Lens Structure		4G2P	
21	IR-Filter		IR650-850nm	
22	Weight		9.5g	
23	Iris Operation		Fixed	
24	Zoom Operation		Fixed	
25	Focus Operation		Manual	
26	Operating Temperature		-20° ~+85°	
27	Storage Temperature		-20° ~+85°	

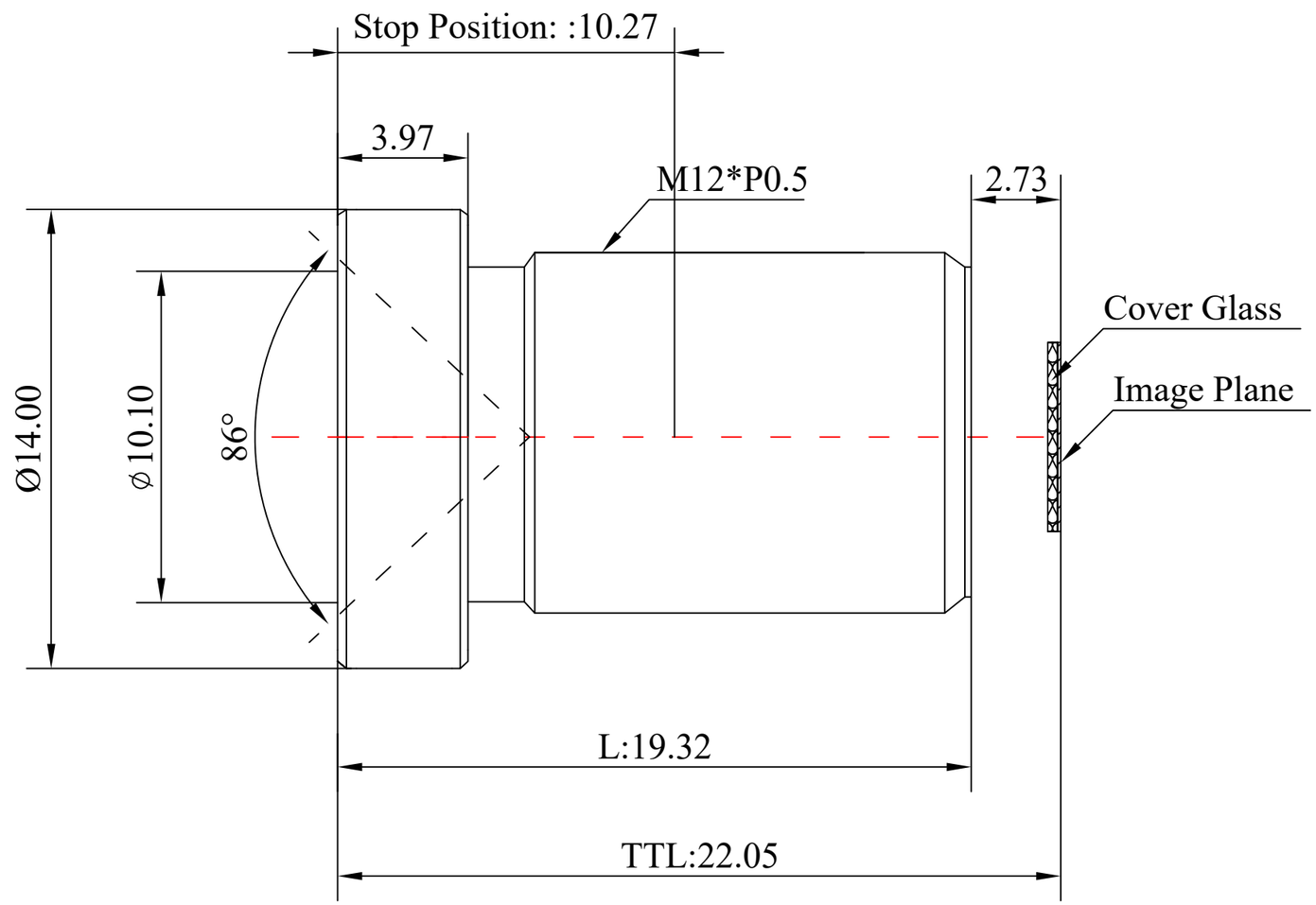

Scale	Remark	Tolerances	Date	Revised	
4：1	X	± 0.2	2018-07-07	CH1100AD Rev1.0	
	X.0	± 0.15			
Units	X.00	± 0.10	Design	Linda	2018-08-17
	X.000	± 0.001	Checked	Anna	2018-09-25
mm	Angle	± 0.5°	Approval	Sanmu	2018-10-20

福州创安光电科技有限公司
FUZHOU CHUANGAN OPTICS CO.，LTD

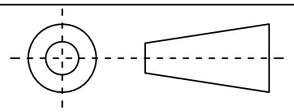

3D Angle Projection